VT7ED or VT7EDS - 042 - B22 - 1 R 00 - A 1 01 *

Series

VT7ED series-125-A2 HW
ISO 2 bolts 3019-2 mounting flange

VT7EDS series- SAE C 2 bolts
Mounting flange J744c

Cam ring for "P1" (P1)

Volumetric displacement cm3/rev (in3/rev)

042 = 132.2 (8.07)	057 = 183.2 (11.18)
045 = 142.5 (8.70)	062 = 196.6 (12.0)
050 = 158.5 (9.67)	066 = 213.0 (13.0)
052 = 163.8 (10.0)	072 = 227.1 (13.86)
054 = 170.9 (10.43)	085 = 268.7 (16.40)

Cam ring for "P2" (P2)

Volumetric displacement cm3/rev (in3/rev)

B14 = 43.9 (2.68)	B31 = 99.1 (6.05)
B17 = 55.0 (3.36)	B35 = 113.4 (6.92)
B20 = 66.0 (4.03)	B38 = 120.6 (7.36)
B22 = 70.3 (4.29)	B42 = 137.5 (8.39)
B24 = 81.1 (4.95)	045 = 145.7 (8.89)
B28 = 89.9 (5.49)	050 = 157.9 (9.64)

Type of shaft VT7ED- VT7EDS
5 - keyed (ISO/R775 -G38M)

Type of shaft VT7EDS
1 - keyed (SAE CC) 3 - splined (SAE C)
2 - keyed (no SAE) 4 - splined (SAE CC)

Direction of rotation (view on shaft end)
R - clockwise
L - counter-clockwise

Porting combination (see page BM-1-5)
00 - standard

Design letter

Seal class
1 - S1 (for mineral oil)
4 - S4 (for fire resistant fluids)
5 - S5 (for mineral oil and fire resistant fluids)

Mounting W/connection variables
4 bolts SAE flange J518

P1= 1-1/2" P2= 1-1/4" S=4"		
	VT7EDS	VT7ED-VT7EDS
Type	UNC	METRIC
code	01	M1

Modifications

VP
DP

INTERNAL LEAKAGE (TYPICAL)

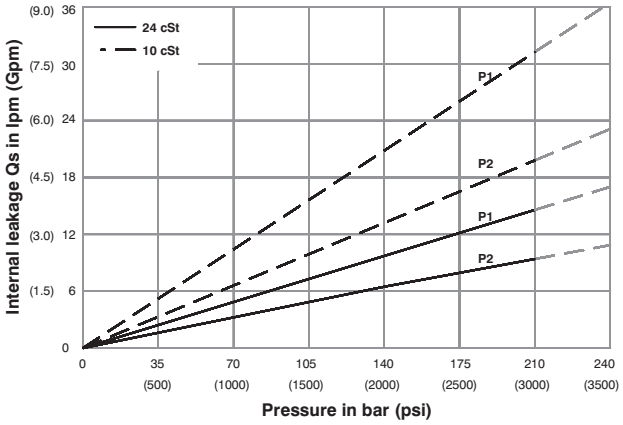

Do not operate pump more than 5 seconds at any speed or viscosity if internal leakage is more than 50% of theoretical flow. Total leakage is the sum of each section loss at its operating conditions.

NOISE LEVEL (TYPICAL)

VT7EDS- 050-B31

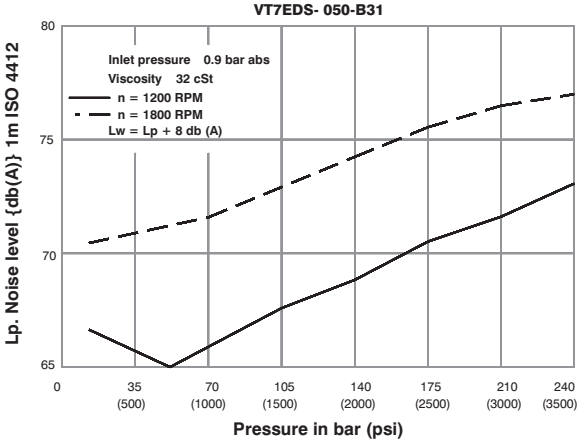

Double pump noise level is given with each section discharging at the pressure noted on the curve.

HYDROMECHANICAL POWER LOSS (TYPICAL)

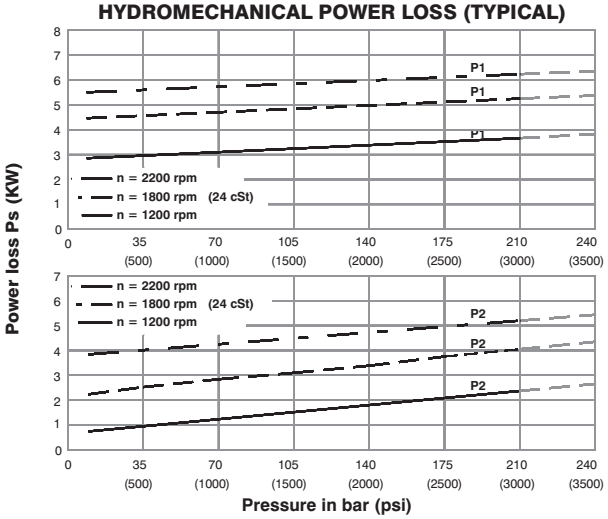

Total hydromechanical power loss is the sum of each section at its operating conditions.

PERMISSIBLE RADIAL LOAD

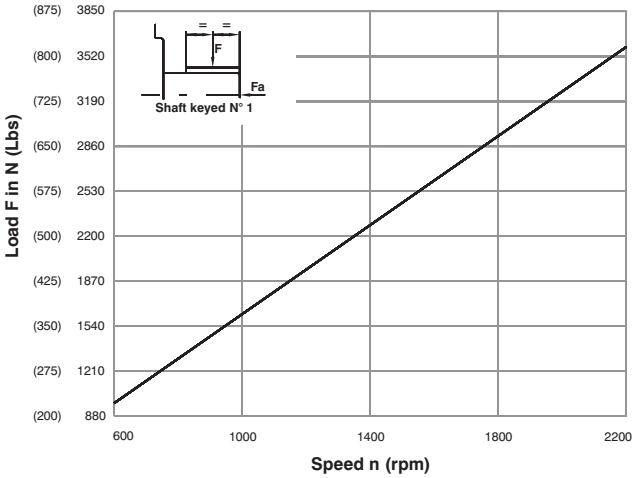

Maximum permissible axial load **Fa** = 2000 N (449 Lbs)

Note: Product details are liable to change without any notice

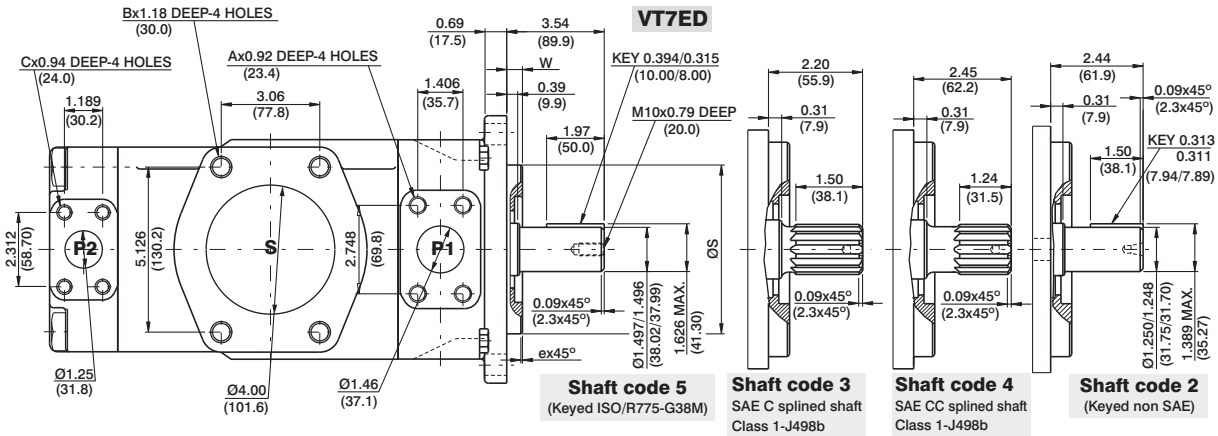

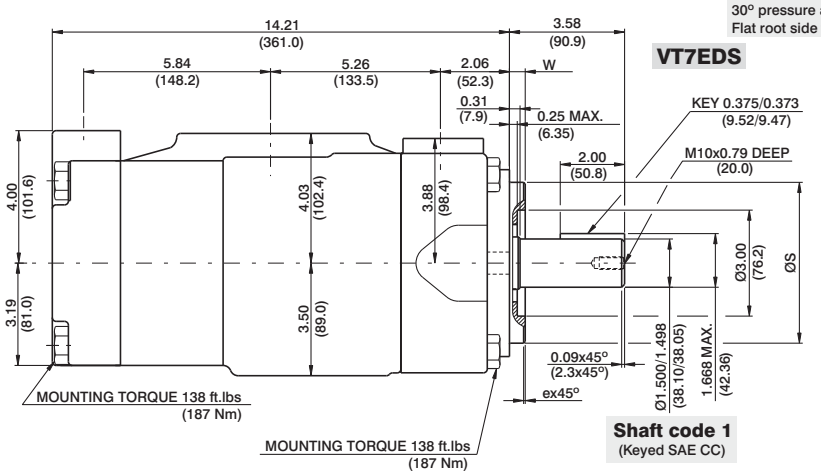

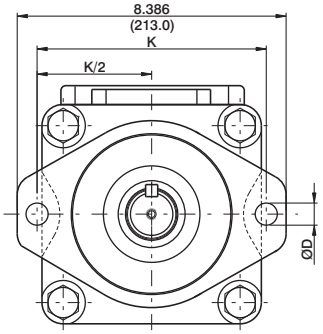

Alternate mounting flange						
Series	ØS		ex45º	W	K	ØD
	MAX.	Min.				
VT7ED	4.921 (124.99)	4.919 (124.94)	0.079 (2.0)	0.374 (9.49)	7.087 (180.0)	0.709 (18.0)
VT7EDS	5.00 (127.00)	4.998 (126.94)	0.051 (1.3)	0.50 (12.7)	7.126 (181.0)	0.689 (17.5)

Shaft torque limits in³/rev x psi (ml/rev x bar)	
Shaft	Vp x p max. (P1+P2)
1	64039 (72372)
2	30638 (34590)
3	54207 (61200)
4	60673 (68568)
5	60673 (68568)

Alternate connect.variables		
	01	M1
A	1/2-13 UNC	M12
B	5/8-11 UNC	M16
C	7/16-14 UNC	M12

OPERATING CHARACTERISTICS - TYPICAL (24 cST) (Input power p (KW) for one cartridge only)

Pressure port	Series	Volumetric Displacement Vp		Flow q & n = 1800 rpm						Input power p & n = 1800 rpm					
				p = 0 bar (0 psi)		p = 140 bar (2000 psi)		p = 240 bar (3500 psi)		p = 7 bar (100 psi)		p = 140 bar (2000 psi)		p = 240 bar (3500 psi)	
		in³/rev	cm³/rev	gpm	lpm	gpm	lpm	gpm	lpm	hp	kw	hp	kw	hp	kw
P1	042	8.07	132.2	62.92	237.8	60.37	228.2	58.52	221.2	8.09	6.03	78.44	58.49	133.80	99.77
	045	8.70	142.5	67.72	255.9	65.17	246.3	63.32	239.3	8.37	6.24	84.04	62.66	143.60	107.08
	050	9.67	158.5	75.38	284.9	72.83	275.3	70.98	268.3	8.82	6.58	92.97	69.32	159.24	118.75
	052	10.00	163.8	78.37	296.2	75.82	286.6	73.97	279.6	8.99	6.70	96.47	71.94	165.36	123.31
	054	10.43	170.9	81.27	307.2	78.72	297.6	76.87	290.6	9.17	6.84	99.75	74.38	177.46	132.33
	057	11.18	183.2	87.12	329.3	84.57	319.7	82.72	312.7	9.51	7.09	106.57	79.47	189.84	141.56
	062	12.00	196.6	93.54	353.6	90.99	343.9	89.14	336.9	9.88	7.37	114.17	85.13	196.34	146.41
	066	13.00	213.0	101.44	383.4	98.89	373.8	97.04	366.8	10.34	7.71	123.38	92.0	212.46	158.43
	072	13.86	227.1	108.00	408.2	105.45	398.6	103.60	391.6	10.72	7.99	131.04	97.71	225.86	166.42
	085 1)	16.40	268.7	127.79	483.0	126.13	476.7	--	--	11.88	8.85	101.66	75.80	--	--
				p = 0 bar (0 psi)		p = 140 bar (2000 psi)		p = 250 bar (3630 psi)		p = 7 bar (100 psi)		p = 140 bar (2000 psi)		p = 250 bar (3630 psi)	
P2	B14	2.68	43.9	20.92	79.1	19.18	72.5	17.81	67.3	3.46	2.6	27.77	20.7	47.03	35.07
	B17	3.36	55.0	26.16	98.8	24.41	92.3	23.04	87.0	3.77	2.8	33.88	25.3	57.71	43.03
	B20	4.03	66.0	31.39	118.6	29.64	112.0	28.27	106.8	4.07	3.0	39.98	29.8	68.39	50.99
	B22	4.29	70.3	33.43	126.4	31.69	119.8	30.32	104.6	4.19	3.1	42.37	31.6	72.57	54.11
	B24	4.95	81.1	38.57	145.8	36.82	139.2	35.45	134.0	4.49	3.4	48.36	36.1	83.06	61.93
	B28	5.49	89.9	42.80	161.8	41.06	155.2	39.69	150.0	4.74	3.5	53.30	39.7	91.70	68.38
	B31	6.05	99.1	47.18	178.3	45.43	171.7	44.06	166.5	4.99	3.7	58.41	43.6	100.63	75.03
	B35 2)	6.92	113.4	53.93	203.9	52.18	197.2	50.81	192.0	5.39	4.0	66.29	49.4	114.42	85.32
	B38 2)	7.36	120.6	57.35	216.8	55.61	210.2	54.24	204.9	5.59	4.2	70.28	52.4	121.42	90.54
	B42 3)	8.39	137.5	65.39	247.2	63.65	240.6	62.28	235.4	6.05	4.5	79.66	59.4	137.83	102.77
	045 4)	8.89	145.7	69.29	262.0	67.11	253.6	65.31	246.8	6.74	5.0	83.75	62.4	145.79	108.71
	050 5)	9.64	157.9	75.14	284.0	72.96	275.8	71.78	271.3	7.08	5.3	90.58	67.5	134.50	100.3

1) 085 = 90 bar (1300 psi) max.int. & 085 = 2000 rpm max. 2) B35-B38 = 280 bar (4060 psi) max.int. 3) B42 = 260 bar (3770 psi) max.int.
4) 045 = 240 bar (3500 psi) max. int. 5) 050 = 210 bar (3000 psi) max. int

Note: Product details are liable to change without any notice